elesa+Ganter

New

Cable Glands



DESIGNED
FOR ENGINEERING

CABLE GLANDS

Secure, versatile and suitable for any application

What are cable glands?

Cable glands ensure reliable strain relief and sealing of electrical cables and wires in industrial equipment as well as in machine and plant construction. Elesa+Ganter offers high-quality cable glands of stainless steel, nickel-plated brass and plastic technopolymer.

Each type of material provides its own specific advantages:

- **Stainless steel**: Offers maximum corrosion-resistance and is ideally suited for hygienically sensitive or aggressive environments.
- **Nickel-plated brass**: Ensures high stability, long service life and good protection against mechanical influences.
- **Technopolymer**: Lightweight, resistant to many chemicals and the preferred choice for most industrial applications thanks to its excellent cost-benefit ratio.





Choosing the right thread type is essential for ensuring compatibility with specific housings and machine connections:

- **Metric thread (M)**: This is the current international standard. It offers a fine thread pitch and ensures a secure, vibration-resistant connection.
- **PG thread**: An older, coarser thread system that is primarily used in existing systems or control cabinet construction. It is based on the "Panzergewinde" standard and features larger diameters with comparatively thin wires.
- **NPT thread**: A tapered pipe thread standard from the USA with self-sealing properties.

Due to the tapered shape, the thread seals on tightening, making it especially suitable for pneumatic or liquid applications.

Elesa+Ganter offers a comprehensive selection of accessories for the optimal use of cable glands:

- **Mounting nuts**: for secure mounting, including glass-fibre reinforced polyamide (PA) technopolymer versions for thin-walled enclosures with unthreaded holes.
- **Threaded plugs**: available in brass and glass-fibre reinforced polyamide (PA) technopolymer for reliably sealing unused enclosure openings.
- **Threaded plugs for multiple lines**: for running multiple lines through a single gland.
- **Reducers**: for connecting different thread sizes and enabling the use of smaller cable glands where required.
- **Multiple sealing inserts**: allow multiple cables to pass through a single cable gland while maintaining reliable sealing and strain relief.

With its wide selection of materials, threads and accessories, Elesa+Ganter offers the right solution for practically any electrical installation – reliable, long-lasting and functional.

ELESA and GANTER models all rights reserved in accordance with the law.
Always mention the source when reproducing our drawings.

PRODUCT INDEX

Cable glands

Material

- Brass
- Stainless steel
- Technopolymer

GN 62444
Cable Glands
Brass / Stainless Steel, Metric Thread / PG Thread / NPT Thread



p.4

INOX STAINLESS STEEL

CGT
Cable glands
metric, PG, and NPT threadings, technopolymer



p.7

PA IP68

GN 62444.1
Mounting Nuts
Brass / Stainless Steel, Metric Thread / PG Thread



p.11

INOX STAINLESS STEEL

CGT-NTC
Mounting nuts
for CGT cable glands, metric, PG, and NPT thread, technopolymer



p.12

PA

GN 62444.2
Threaded Plugs
Brass, Metric Thread / PG Thread



p.15

CGT-TC
Threaded plugs
for CGT cable glands, metric and PG thread, technopolymer



p.16

PA IP54

CGA-MS
Multiple sealing inserts
for CGT and GN 62444 cable glands, rubber



p.19

GN 62444.4
Reducers
for Cable Glands GN 62444, Brass, Metric Thread



p.20

CGT-HR
Reducers
for CGT cable glands, metric and PG thread, technopolymer



p.21

PA

ELESA and GANTER models all rights reserved in accordance with the law.
Always mention the source when reproducing our drawings.

GN 62444

Cable Glands

Brass / Stainless Steel,
Metric Thread / PG Thread / NPT Thread



SPECIFICATION

Housing
- Brass, nickel-plated **MS**
- Stainless steel AISI 303 **NI**

Seal insert
Chloroprene rubber (CR)

Clamping insert
Plastic, polyamide (PA)

O-ring
Acrylonitrile butadiene rubber (NBR)

Operating temperature -40 °C to +100 °C

Protection class IP 68

INFORMATION

Cable glands GN 62444 are used to feed cables or wires into enclosures, relieve strain, and seal them. Within the specified clamping range, the sealing and clamping effect increases with the cable diameter.
The cable glands can be screwed into an existing internal thread or mounted in a through hole using a mounting nut.
They include an O-ring for sealing against the enclosure.

ACCESSORY

- GN 62444.1 Mounting Nuts (metric and PG thread), (see page 11)
- GN 62444.2 Threaded Plugs (metric and PG thread), (see page 15)
- GN 62444.4 Reducers (metric thread), (see page 20)

TECHNICAL INFORMATION

- IP Protection Classes (see catalogue page A23)
- Plastic Characteristics (see catalogue page A2)
- Stainless Steel Characteristics (see catalogue page A26)

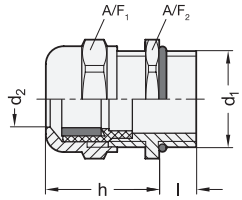

Application example

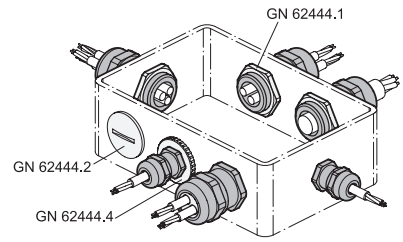

GN 62444-M-MS (Metric Thread)

Description	d1	d2	d2 Clamping range Ø	h max.	Length l	A/F1	A/F2	Recommended tightening torque in Nm A/F1	Recommended tightening torque in Nm A/F2	⚖
GN 62444-M12x1,5-6-MS	M 12 x 1.5	6	3...6	22	6	14	14	2	1	13
GN 62444-M16x1,5-8-MS	M 16 x 1.5	8	4...8	23	7	17	18	2.5	2.5	20
GN 62444-M16x1,5-10-MS	M 16 x 1.5	10	5...10	28.5	7	20	20	2.5	2.5	26
GN 62444-M20x1,5-12-MS	M 20 x 1.5	12	6...12	26.5	8	22	22	4	3.5	29
GN 62444-M25x1,5-14-MS	M 25 x 1.5	14	10...14	27.7	8	24	27	5.5	3.5	47
GN 62444-M25x1,5-17-MS	M 25 x 1.5	17	11...17	32.5	8	27	27	5.5	3.5	49
GN 62444-M32x1,5-18-MS	M 32 x 1.5	18	13...18	33	9	30	34	9	3.5	80
GN 62444-M32x1,5-21-MS	M 32 x 1.5	21	15...21	36	8	34	34	6	5	85
GN 62444-M40x1,5-25-MS	M 40 x 1.5	25	18...25	38	9	40	43	10	5	154
GN 62444-M40x1,5-28-MS	M 40 x 1.5	28	19...28	43.5	9	43	43	11	5	154
GN 62444-M50x1,5-32-MS	M 50 x 1.5	32	22...32	48	9	50	55	20	5	290
GN 62444-M50x1,5-38-MS	M 50 x 1.5	38	27...38	55	9	58	58	20	8	293
GN 62444-M63x1,5-44-MS	M 63 x 1.5	44	34...44	53	14	64	68	20	12	425

ELESA and GANTER models all rights reserved in accordance with the law.
Always mention the source when reproducing our drawings.

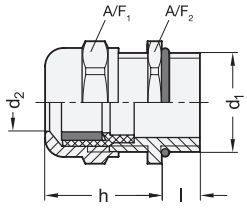

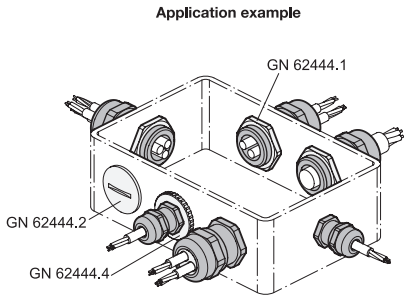

GN 62444-M-NI (Metric Thread) **STAINLESS STEEL**

Description	d1	d2	d2 Clamping range Ø	h max.	Length l	A/F1	A/F2	Recommended tightening torque in Nm A/F1	Recommended tightening torque in Nm A/F2	⚖
GN 62444-M12x1,5-6-NI	M 12 x 1.5	6	3...6	22	6	14	14	5.5	3	10
GN 62444-M16x1,5-8-NI	M 16 x 1.5	8	4...8	23	7	17	19	6.5	4	17
GN 62444-M16x1,5-10-NI	M 16 x 1.5	10	5...10	28.5	7	22	22	8	4	30
GN 62444-M20x1,5-12-NI	M 20 x 1.5	12	6...12	24	8	22	22	8	5.5	24
GN 62444-M25x1,5-14-NI	M 25 x 1.5	14	10...14	27.5	8	24	27	11	6	41
GN 62444-M25x1,5-17-NI	M 25 x 1.5	17	11...17	32.5	8	27	27	14	6	52
GN 62444-M32x1,5-18-NI	M 32 x 1.5	18	13...18	32.5	9	30	36	17	6	78
GN 62444-M32x1,5-21-NI	M 32 x 1.5	21	15...21	36	8	36	36	15	6	86
GN 62444-M40x1,5-25-NI	M 40 x 1.5	25	18...25	40.6	9	41	46	30	12	135
GN 62444-M40x1,5-28-NI	M 40 x 1.5	28	19...28	43.5	9	46	46	17	12	159
GN 62444-M50x1,5-32-NI	M 50 x 1.5	32	22...32	47	9	50	55	42	18	250
GN 62444-M50x1,5-38-NI	M 50 x 1.5	38	27...38	51	9	60	60	30	18	300
GN 62444-M63x1,5-44-NI	M 63 x 1.5	44	34...44	52	14	65	70	55	25	417

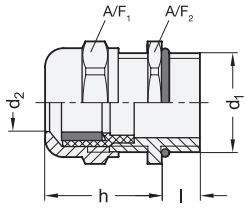

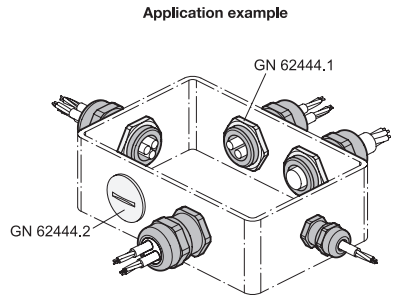

GN 62444-PG-MS (PG Thread)

Description	d1	d2	d2 Clamping range Ø	h max.	Length l	A/F1	A/F2	Recommended tightening torque in Nm A/F1	Recommended tightening torque in Nm A/F2	⚖
GN 62444-PG7-6-MS	PG 7	6	3...6	22	6	14	14	5	3	13
GN 62444-PG9-8-MS	PG 9	8	4...8	23.5	6	17	17	6	4	17
GN 62444-PG11-10-MS	PG 11	10	5...10	26	6	20	20	7	5	25
GN 62444-PG13,5-12-MS	PG 13.5	12	6...12	24.5	6.5	22	22	8	5.5	31
GN 62444-PG16-14-MS	PG 16	14	10...14	28	6.5	24	24	11	7	35
GN 62444-PG21-18-MS	PG 21	18	13...18	32.5	7.2	30	30	17	10	63
GN 62444-PG29-25-MS	PG 29	25	18...25	38.5	8	40	40	30	15	131
GN 62444-PG36-32-MS	PG 36	32	22...32	48	9	50	50	42	20	225
GN 62444-PG48-44-MS	PG 48	44	34...44	53	14	64	64	50	35	363

ELESA and GANTER models all rights reserved in accordance with the law.
Always mention the source when reproducing our drawings.

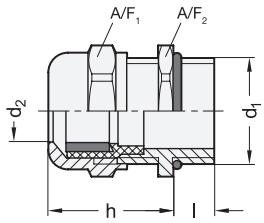

Application example

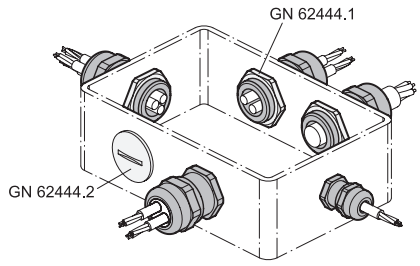

GN 62444-PG-NI (PG Thread) **STAINLESS STEEL**

Description	d1	d2	d2 Clamping range Ø	h max.	Length l	A/F1	A/F2	Recommended tightening torque in Nm A/F1	Recommended tightening torque in Nm A/F2	⚖
GN 62444-PG7-6-NI	PG 7	6	3...6	22	6	14	14	5	3	11
GN 62444-PG9-8-NI	PG 9	8	4...8	23	6	17	19	6	4	18
GN 62444-PG11-10-NI	PG 11	10	5...10	25.5	6	22	22	7	5	33
GN 62444-PG13,5-12-NI	PG 13.5	12	6...12	24	6.5	22	22	8	5.5	33
GN 62444-PG16-14-NI	PG 16	14	10...14	27.5	6.5	24	24	11	7	30
GN 62444-PG21-18-NI	PG 21	18	13...18	32.5	7.2	30	30	17	10	53
GN 62444-PG29-25-NI	PG 29	25	18...25	38.5	8	41	41	30	15	134
GN 62444-PG36-32-NI	PG 36	32	22...32	46	9	50	50	42	20	246
GN 62444-PG48-44-NI	PG 48	44	34...44	49.5	14	65	65	50	35	357

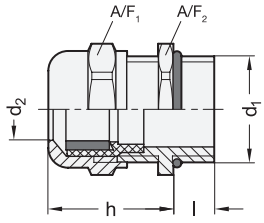

Application example

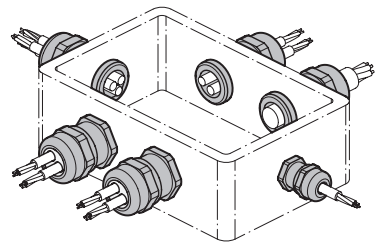

GN 62444-NPT-MS (NPT Thread)

Description	d1	d2	d2 Clamping range Ø	h max.	Length l	A/F1	A/F2	Recommended tightening torque in Nm A/F1	Recommended tightening torque in Nm A/F2	⚖
GN 62444-NPT3/8-8-MS	NPT 3/8	8	4...8	23	11.5	17	19	6.5	3	17
GN 62444-NPT1/2-12-MS	NPT 1/2	12	6...12	25.5	13	22	22	17	5.5	29
GN 62444-NPT1/2-14-MS	NPT 1/2	14	10...14	28	13	24	24	11	5.5	42
GN 62444-NPT3/4-18-MS	NPT 3/4	18	13...18	35.5	13	30	30	17	6	63

ELESA and GANTER models all rights reserved in accordance with the law.
Always mention the source when reproducing our drawings.

Cable glands

metric, PG, and NPT thread, technopolymer

MATERIAL
Polyamide-based (PA) technopolymer, grey colour RAL 7035 (C3) or black RAL 9005 (C9).

SEALING INSERT
Chloroprene rubber (CR)

LOCKING INSERT
Polyamide based (PA) technopolymer

STANDARD EXECUTIONS
- **CGT**: metric threadings.
- **CGT-PG**: PG threadings.
- **CGT-NPT**: NPT threadings.

FEATURES AND APPLICATIONS
They are used to secure and insulate electrical cables inside electrical equipment such as distribution boards and junction boxes, providing protection from dust, water and external factors.
They keep the cable securely fixed in place, preventing mechanical stress or accidental pulling that could affect the internal electrical connections and ensuring the continuity of the electrical connection.
Within the specified clamping range, the sealing and locking effect increases with the diameter of the cable.
Cable glands can be fitted to electrical equipment either by using the existing thread or, in the case of a pass-through hole, by using mounting nuts.

ACCESSORIES
- CGT-NTC: mounting nuts (see page 12)
- CGT-TC: threaded plugs (see page 16)
- CGA-MS: multiple sealing inserts (see page 19)
- CGT-HR: reducers (see page 21)





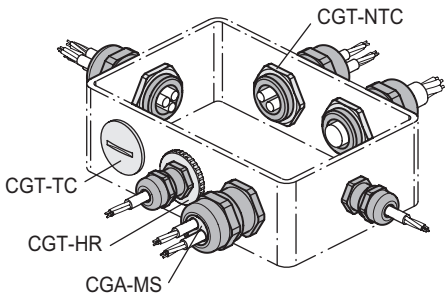

ELESA and GANTER models all rights reserved in accordance with the law.
Always mention the source when reproducing our drawings.

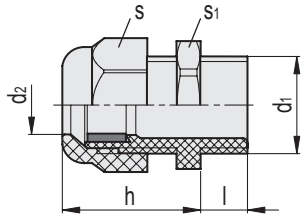

CGT

Code	Description	d_1	d_2	d_2 Clamping range	h_{max}	l	s	s_1	Recommended tightening torque for s [Nm]	Recommended tightening torque for s_1 [Nm]	⚖
560001-C3	CGT-M12x1,5-8-15-C3	M 12 x 1.5	6	3 ÷ 6	23	8	15	15	2	1	3
560001-C9	CGT-M12x1,5-8-15-C9	M 12 x 1.5	6	3 ÷ 6	23	8	15	15	2	1	3
560003-C3	CGT-M16x1,5-8-19-C3	M 16 x 1.5	8	4 ÷ 8	25	8	19	19	2.5	2.5	6
560003-C9	CGT-M16x1,5-8-19-C9	M 16 x 1.5	8	4 ÷ 8	25	8	19	19	2.5	2.5	6
560005-C3	CGT-M16x1,5-10-22-C3	M 16 x 1.5	10	5 ÷ 10	30	10	22	22	2.5	2.5	9
560005-C9	CGT-M16x1,5-10-22-C9	M 16 x 1.5	10	5 ÷ 10	30	10	22	22	2.5	2.5	9
560007-C3	CGT-M20x1,5-10-24-C3	M 20 x 1.5	12	6 ÷ 12	29.5	10	24	24	4	3.5	11
560007-C9	CGT-M20x1,5-10-24-C9	M 20 x 1.5	12	6 ÷ 12	29.5	10	24	24	4	3.5	11
560009-C3	CGT-M20x1,5-10-27-C3	M 20 x 1.5	14	10 ÷ 14	31	10	27	27	5.5	3.5	14
560009-C9	CGT-M20x1,5-10-27-C9	M 20 x 1.5	14	10 ÷ 14	31	10	27	27	5.5	3.5	14
560011-C3	CGT-M25x1,5-8-29-C3	M 25 x 1.5	17	11 ÷ 17	35	8	29	29	5.5	3.5	16
560011-C9	CGT-M25x1,5-8-29-C9	M 25 x 1.5	17	11 ÷ 17	35	8	29	29	5.5	3.5	16
560013-C3	CGT-M25x1,5-10-33-C3	M 25 x 1.5	18	13 ÷ 18	37	10	33	33	9	3.5	23
560013-C9	CGT-M25x1,5-10-33-C9	M 25 x 1.5	18	13 ÷ 18	37	10	33	33	9	3.5	23
560015-C3	CGT-M32x1,5-10-36-C3	M 32 x 1.5	21	15 ÷ 21	42	10	36	36	6	5	25
560015-C9	CGT-M32x1,5-10-36-C9	M 32 x 1.5	21	15 ÷ 21	42	10	36	36	6	5	25
560017-C3	CGT-M32x1,5-15-42-C3	M 32 x 1.5	25	18 ÷ 25	41	15	42	42	10	5	40
560017-C9	CGT-M32x1,5-15-42-C9	M 32 x 1.5	25	18 ÷ 25	41	15	42	42	10	5	40
560019-C3	CGT-M40x1,5-10-46-C3	M 40 x 1.5	28	19 ÷ 28	47	10	46	46	11	5	44
560019-C9	CGT-M40x1,5-10-46-C9	M 40 x 1.5	28	19 ÷ 28	47	10	46	46	11	5	44
560021-C3	CGT-M40x1,5-18-53-C3	M 40 x 1.5	32	22 ÷ 32	51.5	18	53	53	22	5	77
560021-C9	CGT-M40x1,5-18-53-C9	M 40 x 1.5	32	22 ÷ 32	51.5	18	53	53	22	5	77
560023-C3	CGT-M50x1,5-18-60-C3	M 50 x 1.5	38	30 ÷ 38	53	18	60	60	20	8	91
560023-C9	CGT-M50x1,5-18-60-C9	M 50 x 1.5	38	30 ÷ 38	53	18	60	60	20	8	91
560025-C3	CGT-M63x1,5-18-65-C3	M 63 x 1.5	44	34 ÷ 44	53	18	65	65	20	12	98
560025-C9	CGT-M63x1,5-18-65-C9	M 63 x 1.5	44	34 ÷ 44	53	18	65	65	20	12	98

ELESA and GANTER models all rights reserved in accordance with the law.
Always mention the source when reproducing our drawings.

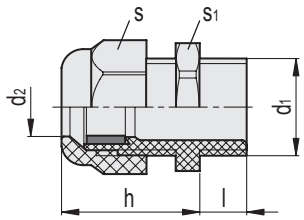

CGT-PG

Code	Description	d_1	d_2	d_2 Clamping range	h_{max}	l	s	s_1	Recommended tightening torque for s [Nm]	Recommended tightening torque for s_1 [Nm]	⚖
560051-C3	CGT-PG7-8-15-C3	PG 7	6	3 ÷ 6	22	8	15	15	2	1	3
560051-C9	CGT-PG7-8-15-C9	PG 7	6	3 ÷ 6	22	8	15	15	2	1	3
560053-C3	CGT-PG9-8-19-C3	PG 9	8	4 ÷ 8	26.5	8	19	19	2.5	1.5	6
560053-C9	CGT-PG9-8-19-C9	PG 9	8	4 ÷ 8	26.5	8	19	19	2.5	1.5	6
560055-C3	CGT-PG11-8-22-C3	PG 11	10	5 ÷ 10	29	8	22	22	2.5	2	8
560055-C9	CGT-PG11-8-22-C9	PG 11	10	5 ÷ 10	29	8	22	22	2.5	2	8
560057-C3	CGT-PG13,5-10-24-C3	PG 13.5	12	6 ÷ 12	29	10	24	24	4	3	10
560057-C9	CGT-PG13,5-10-24-C9	PG 13.5	12	6 ÷ 12	29	10	24	24	4	3	10
560059-C3	CGT-PG16-10-27-C3	PG 16	14	10 ÷ 14	31	10	27	27	5.5	3.5	13
560059-C9	CGT-PG16-10-27-C9	PG 16	14	10 ÷ 14	31	10	27	27	5.5	3.5	13
560061-C3	CGT-PG21-11-33-C3	PG 21	18	13 ÷ 18	37	11	33	33	5.5	3.5	21
560061-C9	CGT-PG21-11-33-C9	PG 21	18	13 ÷ 18	37	11	33	33	5.5	3.5	21
560063-C3	CGT-PG29-11-42-C3	PG 29	25	18 ÷ 25	41	11	42	42	10	9.5	37
560063-C9	CGT-PG29-11-42-C9	PG 29	25	18 ÷ 25	41	11	42	42	10	9.5	37
560065-C3	CGT-PG36-13-53-C3	PG 36	32	22 ÷ 32	51.5	13	53	53	16	11	69
560065-C9	CGT-PG36-13-53-C9	PG 36	32	22 ÷ 32	51.5	13	53	53	16	11	69
560067-C3	CGT-PG42-13-60-C3	PG 42	38	30 ÷ 38	53.5	13	60	60	20	14	82
560067-C9	CGT-PG42-13-60-C9	PG 42	38	30 ÷ 38	53.5	13	60	60	20	14	82
560069-C3	CGT-PG48-14-65-C3	PG 48	44	34 ÷ 44	53.5	14	65	65	20	14	92
560069-C9	CGT-PG48-14-65-C9	PG 48	44	34 ÷ 44	53.5	14	65	65	20	14	92

ELESA and GANTER models all rights reserved in accordance with the law.
Always mention the source when reproducing our drawings.

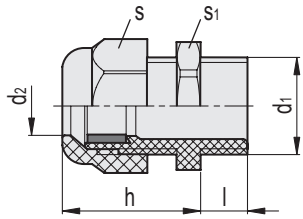

CGT-NPT

Code	Description	d_1	d_2	d_2 Clamping range	h_{max}	l	s	s_1	Recommended tightening torque for s [Nm]	Recommended tightening torque for s_1 [Nm]	⚖
560071-C3	CGT-3/8 NPT-15-22-C3	3/8 NPT	10	5 ÷ 10	29	15	22	22	2.5	1	10
560071-C9	CGT-3/8 NPT-15-22-C9	3/8 NPT	10	5 ÷ 10	29	15	22	22	2.5	1	10
560073-C3	CGT-1/2 NPT-15-24-C3	1/2 NPT	12	6 ÷ 12	29	15	24	24	5	2	12
560073-C9	CGT-1/2 NPT-15-24-C9	1/2 NPT	12	6 ÷ 12	29	15	24	24	5	2	12
560075-C3	CGT-1/2 NPT-15-27-C3	1/2 NPT	14	10 ÷ 14	31	15	27	27	5	2	15
560075-C9	CGT-1/2 NPT-15-27-C9	1/2 NPT	14	10 ÷ 14	31	15	27	27	5	2	15
560077-C3	CGT-3/4 NPT-15-33-C3	3/4 NPT	18	13 ÷ 18	37	15	33	33	9	3	24
560077-C9	CGT-3/4 NPT-15-33-C9	3/4 NPT	18	13 ÷ 18	37	15	33	33	9	3	24
560079-C3	CGT-1 NPT-18-42-C3	1 NPT	25	18 ÷ 25	41	18	42	42	9.5	4	41
560079-C9	CGT-1 NPT-18-42-C9	1 NPT	25	18 ÷ 25	41	18	42	42	9.5	4	41

ELESA and GANTER models all rights reserved in accordance with the law.
Always mention the source when reproducing our drawings.

GN 62444.1

Mounting Nuts

Brass / Stainless Steel,
Metric Thread / PG Thread

SPECIFICATION

Brass MS
Nickel-plated

Stainless steel AISI 303 NI

INFORMATION

Mounting nuts GN 62444.1 are used for fastening cable glands, reducers or threaded plugs in through holes in enclosures.

TECHNICAL INFORMATION

- Stainless Steel Characteristics (see catalogue page A26)



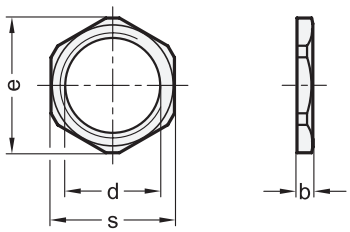

Application example

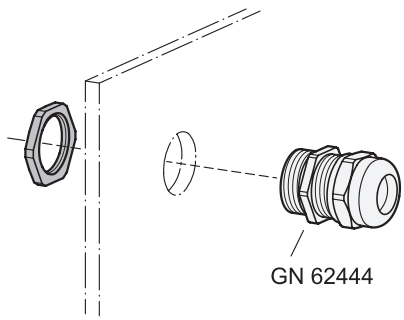

GN 62444.1-M-MS (Metric Thread)

Description	d	b	e ≈	s	⚖
GN 62444.1-M12x1,5-MS	M 12 x 1.5	2.8	16.3	15	2
GN 62444.1-M16x1,5-MS	M 16 x 1.5	2.8	20.9	19	3
GN 62444.1-M20x1,5-MS	M 20 x 1.5	3	26.2	24	4
GN 62444.1-M25x1,5-MS	M 25 x 1.5	3.5	31.7	29	7
GN 62444.1-M32x1,5-MS	M 32 x 1.5	4	39.5	36	11
GN 62444.1-M40x1,5-MS	M 40 x 1.5	5	50.4	46	24
GN 62444.1-M50x1,5-MS	M 50 x 1.5	5	58.5	57	33
GN 62444.1-M63x1,5-MS	M 63 x 1.5	6	76.6	70	58

GN 62444.1-PG-MS (PG Thread)

Description	d	b	e ≈	s	⚖
GN 62444.1-PG7-MS	PG 7	2.8	16.5	15	2
GN 62444.1-PG9-MS	PG 9	2.8	19.9	18	3
GN 62444.1-PG11-MS	PG 11	3	23.4	21	3
GN 62444.1-PG13,5-MS	PG 13.5	3	25.4	23	3
GN 62444.1-PG16-MS	PG 16	3	28.9	26	5
GN 62444.1-PG21-MS	PG 21	3.5	35.4	32	8
GN 62444.1-PG29-MS	PG 29	4	45	41	13
GN 62444.1-PG36-MS	PG 36	5	57	51	22
GN 62444.1-PG42-MS	PG 42	5	64.7	60	34
GN 62444.1-PG48-MS	PG 48	5.5	69	64	35

GN 62444.1-M-NI (Metric Thread) **STAINLESS STEEL**

Description	d	b	e ≈	s	⚖
GN 62444.1-M12x1,5-NI	M 12 x 1.5	2.8	16.3	15	2
GN 62444.1-M16x1,5-NI	M 16 x 1.5	3	20.9	19	3
GN 62444.1-M20x1,5-NI	M 20 x 1.5	3.5	26.6	24	5
GN 62444.1-M25x1,5-NI	M 25 x 1.5	4	32.7	30	7
GN 62444.1-M32x1,5-NI	M 32 x 1.5	5	38.7	36	10
GN 62444.1-M40x1,5-NI	M 40 x 1.5	5	49.6	46	20
GN 62444.1-M50x1,5-NI	M 50 x 1.5	5	59.5	55	27
GN 62444.1-M63x1,5-NI	M 63 x 1.5	6	76.6	70	47

GN 62444.1-PG-NI (PG Thread) **STAINLESS STEEL**

Description	d	b	e ≈	s	⚖
GN 62444.1-PG7-NI	PG 7	2.8	15.4	14	2
GN 62444.1-PG9-NI	PG 9	2.8	20.9	19	2
GN 62444.1-PG11-NI	PG 11	3	23.9	22	3
GN 62444.1-PG13,5-NI	PG 13.5	3	26.3	24	3
GN 62444.1-PG16-NI	PG 16	3	29.6	27	5
GN 62444.1-PG21-NI	PG 21	3.5	35.7	32	7
GN 62444.1-PG29-NI	PG 29	4	45.5	41	12
GN 62444.1-PG36-NI	PG 36	5	65.9	60	19

ELESA and GANTER models all rights reserved in accordance with the law.
Always mention the source when reproducing our drawings.

Mounting nuts

for CGT cable glands, metric, PG, and NPT thread, technopolymer



MATERIAL

Glass-fibre reinforced polyamide based (PA) technopolymer, RAL 7035 (C3) grey colour or RAL 9005 (C9) black colour.

STANDARD EXECUTIONS

- **CGT-NTC**: metric threadings.
- **CGT-NTC-PG**: PG threadings.
- **CGT-NTC-NPT**: NPT threadings.

FEATURES AND APPLICATIONS

They are used to secure a CGT cable gland in the opening in the panel of a distribution board or junction box, to ensure a mechanical seal. Similarly, these can be used to secure CGT-HR reducers or CGT-TC threaded plugs.

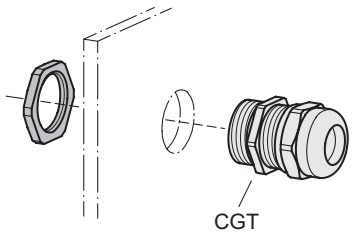

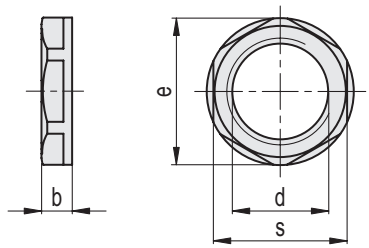

CGT-NTC

Code	Description	d	b	e ≈	s	⚖
560101-C3	CGT-NTC-M12x1,5-C3	M 12 x 1.5	5	19.3	18	1
560101-C9	CGT-NTC-M12x1,5-C9	M 12 x 1.5	5	19.3	18	1
560103-C3	CGT-NTC-M16x1,5-C3	M 16 x 1.5	5	24.2	22	2
560103-C9	CGT-NTC-M16x1,5-C9	M 16 x 1.5	5	24.2	22	2
560105-C3	CGT-NTC-M20x1,5-C3	M 20 x 1.5	6	28.6	26	2
560105-C9	CGT-NTC-M20x1,5-C9	M 20 x 1.5	6	28.6	26	2
560107-C3	CGT-NTC-M25x1,5-C3	M 25 x 1.5	6	35	32	3
560107-C9	CGT-NTC-M25x1,5-C9	M 25 x 1.5	6	35	32	3
560109-C3	CGT-NTC-M32x1,5-C3	M 32 x 1.5	7	45.9	41	7
560109-C9	CGT-NTC-M32x1,5-C9	M 32 x 1.5	7	45.9	41	7
560111-C3	CGT-NTC-M40x1,5-C3	M 40 x 1.5	7	55.7	50	7
560111-C9	CGT-NTC-M40x1,5-C9	M 40 x 1.5	7	55.7	50	7
560113-C3	CGT-NTC-M50x1,5-C3	M 50 x 1.5	8	65.7	60	13
560113-C9	CGT-NTC-M50x1,5-C9	M 50 x 1.5	8	65.7	60	13
560115-C3	CGT-NTC-M63x1,5-C3	M 63 x 1.5	8	82.3	75	20
560115-C9	CGT-NTC-M63x1,5-C9	M 63 x 1.5	8	82.3	75	20

ELESA and GANTER models all rights reserved in accordance with the law.
Always mention the source when reproducing our drawings.

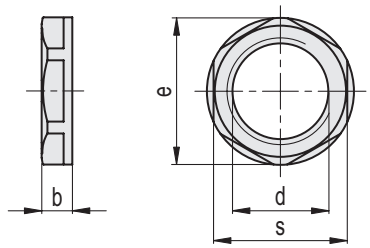

CGT-NTC-PG

Code	Description	d	b	e ≈	s	⚖
560131-C3	CGT-NTC-PG7-C3	PG 7	5	20.9	19	1
560131-C9	CGT-NTC-PG7-C9	PG 7	5	20.9	19	1
560133-C3	CGT-NTC-PG9-C3	PG 9	5	24.1	22	2
560133-C9	CGT-NTC-PG9-C9	PG 9	5	24.1	22	2
560135-C3	CGT-NTC-PG11-C3	PG 11	5	26	24	2
560135-C9	CGT-NTC-PG11-C9	PG 11	5	26	24	2
560137-C3	CGT-NTC-PG13,5-C3	PG 13.5	6	29	27	3
560137-C9	CGT-NTC-PG13,5-C9	PG 13.5	6	29	27	3
560139-C3	CGT-NTC-PG16-C3	PG 16	6	33.2	30	3
560139-C9	CGT-NTC-PG16-C9	PG 16	6	33.2	30	3
560141-C3	CGT-NTC-PG21-C3	PG 21	7	39	36	5
560141-C9	CGT-NTC-PG21-C9	PG 21	7	39	36	5
560143-C3	CGT-NTC-PG29-C3	PG 29	7	50	46	7
560143-C9	CGT-NTC-PG29-C9	PG 29	7	50	46	7
560145-C3	CGT-NTC-PG36-C3	PG 36	8	66.1	60	15
560145-C9	CGT-NTC-PG36-C9	PG 36	8	66.1	60	15
560147-C3	CGT-NTC-PG42-C3	PG 42	8	73.3	65	16
560147-C9	CGT-NTC-PG42-C9	PG 42	8	73.3	65	16
560149-C3	CGT-NTC-PG48-C3	PG 48	8	78.5	70	17
560149-C9	CGT-NTC-PG48-C9	PG 48	8	78.5	70	17

ELESA and GANTER models all rights reserved in accordance with the law.
Always mention the source when reproducing our drawings.

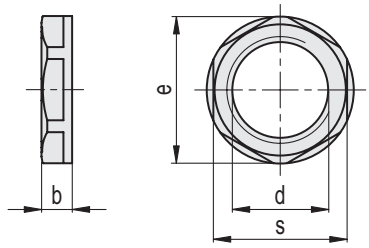

CGT-NTC-NPT

Code	Description	d	b	e ≈	s	⚖
560151-C3	CGT-NTC-3/8 NPT-C3	3/8 NPT	7	24.3	22	2
560151-C9	CGT-NTC-3/8 NPT-C9	3/8 NPT	7	24.3	22	2
560153-C3	CGT-NTC-1/2 NPT-C3	1/2 NPT	7	28.3	27	3
560153-C9	CGT-NTC-1/2 NPT-C9	1/2 NPT	7	28.3	27	3
560155-C3	CGT-NTC-3/4 NPT-C3	3/4 NPT	7	35.4	33	4
560155-C9	CGT-NTC-3/4 NPT-C9	3/4 NPT	7	35.4	33	4
560157-C3	CGT-NTC-1 NPT-C3	1 NPT	7	44.3	41	6
560157-C9	CGT-NTC-1 NPT-C9	1 NPT	7	44.3	41	6

ELESA and GANTER models all rights reserved in accordance with the law.
Always mention the source when reproducing our drawings.

GN 62444.2

Threaded Plugs

Brass,
Metric Thread / PG Thread

SPECIFICATION

Threaded plug
Brass **MS**
- Nickel-plated
- Operating temperature -20 °C to +80 °C

O-ring
Acrylonitrile butadiene rubber (NBR)

Protection class IP 68

INFORMATION

Threaded plugs GN 62444.2 seal unused mounting holes for cable glands. They can be screwed into an existing internal thread or mounted in a through hole using a mounting nut.
They include an O-ring for sealing against the enclosure.

ACCESSORY

- GN 62444.1 Mounting Nuts (see page 11)

TECHNICAL INFORMATION

- IP Protection Classes (see catalogue page A23)



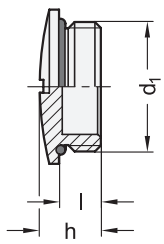

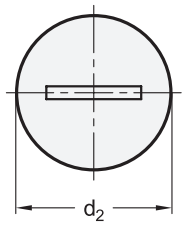

Application example

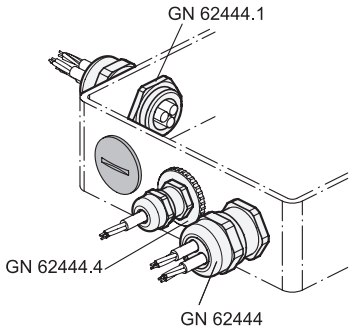

GN 62444.2-M-MS (Metric Thread)

Description	d1	d2	h	Length l	⚖
GN 62444.2-M12x1,5-MS	M 12 x 1.5	14	7.5	5	4
GN 62444.2-M16x1,5-MS	M 16 x 1.5	18	8	5	6
GN 62444.2-M20x1,5-MS	M 20 x 1.5	22	8.5	6	8
GN 62444.2-M25x1,5-MS	M 25 x 1.5	28	11	7	19
GN 62444.2-M32x1,5-MS	M 32 x 1.5	35	12	8	24
GN 62444.2-M40x1,5-MS	M 40 x 1.5	44	13	8	40
GN 62444.2-M50x1,5-MS	M 50 x 1.5	54	15	9	95
GN 62444.2-M63x1,5-MS	M 63 x 1.5	67	16	10	123

GN 62444.2-PG-MS (PG Thread)

Description	d1	d2	h	Length l	⚖
GN 62444.2-PG7-MS	PG 7	15	7.5	5	3
GN 62444.2-PG9-MS	PG 9	18	8	5	5
GN 62444.2-PG11-MS	PG 11	22	8	5	8
GN 62444.2-PG13,5-MS	PG 13.5	24	9	6	9
GN 62444.2-PG16-MS	PG 16	26	9	6	10
GN 62444.2-PG21-MS	PG 21	32	10	6	21
GN 62444.2-PG29-MS	PG 29	40	12	8	42
GN 62444.2-PG36-MS	PG 36	50	15	9	64

ELESA and GANTER models all rights reserved in accordance with the law.
Always mention the source when reproducing our drawings.

Threaded plugs

for CGT cable glands, metric and PG thread, technopolymer



MATERIAL

Glass-fibre reinforced polyamide based (PA) technopolymer, RAL 7035 (C3) grey colour or RAL 9005 (C9) black colour.

STANDARD EXECUTIONS

- **CGT-TC-S**: metric threading, cross slot, grey colour.
- **CGT-TC-AV**: metric threading, screwdriver slot, black colour.
- **CGT-TC-PG-AV**: PG threading, screwdriver slot, grey or black colour.

FEATURES AND APPLICATIONS

They are used to seal any unused holes in electrical equipment, such as distribution boards or junction boxes, ensuring a sealed fit and protection against dust and moisture.

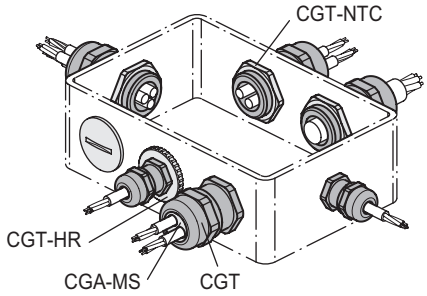

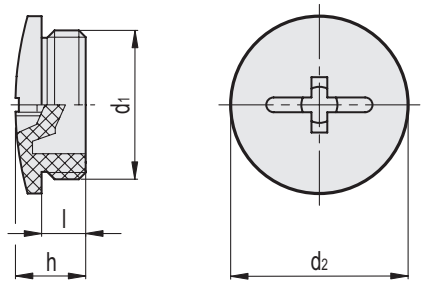

CGT-TC-S

Code	Description	d_1	d_2	h	l	⚖
560251-C3	CGT-TC-M12x1,5-S-C3	M 12 x 1.5	15	8	6	1
560253-C3	CGT-TC-M16x1,5-S-C3	M 16 x 1.5	20	9	6	2
560255-C3	CGT-TC-M20x1,5-S-C3	M 20 x 1.5	24	9.5	6	2
560257-C3	CGT-TC-M25x1,5-S-C3	M 25 x 1.5	29.7	11.5	8	4
560259-C3	CGT-TC-M32x1,5-S-C3	M 32 x 1.5	37.1	12	8	5
560261-C3	CGT-TC-M40x1,5-S-C3	M 40 x 1.5	46	13	8	8
560263-C3	CGT-TC-M50x1,5-S-C3	M 50 x 1.5	56.3	15	10	12
560265-C3	CGT-TC-M63x1,5-S-C3	M 63 x 1.5	69.3	17	12	19

ELESA and GANTER models all rights reserved in accordance with the law.
Always mention the source when reproducing our drawings.

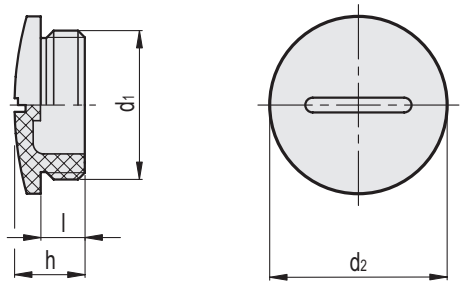

CGT-TC-AV

Code	Description	d_1	d_2	h	l	⚖
560251-C9	CGT-TC-M12x1,5-AV-C9	M 12 x 1.5	15	8	6	1
560253-C9	CGT-TC-M16x1,5-AV-C9	M 16 x 1.5	20	9	6	2
560255-C9	CGT-TC-M20x1,5-AV-C9	M 20 x 1.5	24	9.5	6	2
560257-C9	CGT-TC-M25x1,5-AV-C9	M 25 x 1.5	29.7	11.5	8	4
560259-C9	CGT-TC-M32x1,5-AV-C9	M 32 x 1.5	37.1	12	8	5
560261-C9	CGT-TC-M40x1,5-AV-C9	M 40 x 1.5	46	13	8	8
560263-C9	CGT-TC-M50x1,5-AV-C9	M 50 x 1.5	56.3	15	10	12
560265-C9	CGT-TC-M63x1,5-AV-C9	M 63 x 1.5	69.3	17	12	19

ELESA and GANTER models all rights reserved in accordance with the law.
Always mention the source when reproducing our drawings.

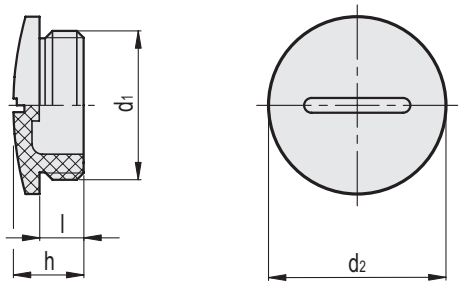

CGT-TC-PG-AV

Code	Description	d_1	d_2	h	l	⚖
560281-C3	CGT-TC-PG7-AV-C3	PG 7	15	8	6	1
560281-C9	CGT-TC-PG7-AV-C9	PG 7	15	8	6	1
560283-C3	CGT-TC-PG9-AV-C3	PG 9	19.1	9.5	6.5	1
560283-C9	CGT-TC-PG9-AV-C9	PG 9	19.1	9.5	6.5	1
560285-C3	CGT-TC-PG11-AV-C3	PG 11	22.1	10	6.5	2
560285-C9	CGT-TC-PG11-AV-C9	PG 11	22.1	10	6.5	2
560287-C3	CGT-TC-PG13-AV-C3	PG 13.5	25.2	10	6.5	2
560287-C9	CGT-TC-PG13-AV-C9	PG 13.5	25.2	10	6.5	2
560289-C3	CGT-TC-PG16-AV-C3	PG 16	27.1	10	6.5	3
560289-C9	CGT-TC-PG16-AV-C9	PG 16	27.1	10	6.5	3
560291-C3	CGT-TC-PG21-AV-C3	PG 21	33.2	12	8	4
560291-C9	CGT-TC-PG21-AV-C9	PG 21	33.2	12	8	4
560293-C3	CGT-TC-PG29-AV-C3	PG 29	44	12.5	8	6
560293-C9	CGT-TC-PG29-AV-C9	PG 29	44	12.5	8	6
560295-C3	CGT-TC-PG36-AV-C3	PG 36	55	14	10	10
560295-C9	CGT-TC-PG36-AV-C9	PG 36	55	14	10	10
560297-C3	CGT-TC-PG42-AV-C3	PG 42	62	14	10	16
560297-C9	CGT-TC-PG42-AV-C9	PG 42	62	14	10	16
560299-C3	CGT-TC-PG48-AV-C3	PG 48	68.3	16	12	24
560299-C9	CGT-TC-PG48-AV-C9	PG 48	68.3	16	12	24

ELESA and GANTER models all rights reserved in accordance with the law.
Always mention the source when reproducing our drawings.

Multiple sealing inserts

for CGT and GN 62444 cable glands, rubber

MATERIAL

Thermoplastic elastomer (TPE).

FEATURES AND APPLICATIONS

They are used as an alternative to the sealing inserts present in cable glands when more than one cable needs to be routed through the same cable gland; they can be used interchangeably with both CGT technopolymer cable glands and GN 62444 metal cable glands.



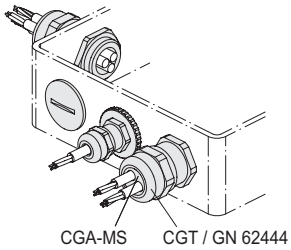

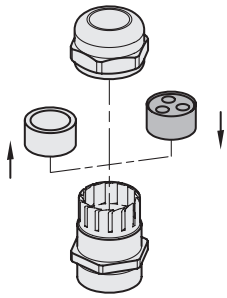

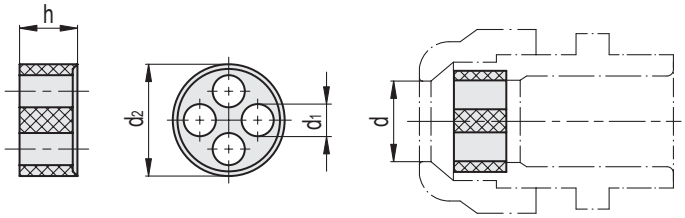

CGA-MS

Code	Description	d	d_1	d_2	h	Number of holes	For cable glands	⚖
561101	CGA-MS-11-3-2-TPE	8	3	10.6	7.5	2	CGT-8 / GN 62444-8	1
561103	CGA-MS-11-2-3-TPE	8	2	10.6	7.5	3	CGT-8 / GN 62444-8	1
561105	CGA-MS-11-2-4-TPE	8	2	10.6	7.5	4	CGT-8 / GN 62444-8	1
561107	CGA-MS-11-3-4-TPE	8	3	10.6	7.5	4	CGT-8 / GN 62444-8	1
561109	CGA-MS-13-4-2-TPE	10	4	13.3	8.5	2	CGT-10 / GN 62444-10	1
561111	CGA-MS-13-5-2-TPE	10	5	13.3	8.5	2	CGT-10 / GN 62444-10	1
561113	CGA-MS-13-4-3-TPE	10	4	13.3	8.5	3	CGT-10 / GN 62444-10	1
561115	CGA-MS-13-5-3-TPE	10	5	13.3	8.5	3	CGT-10 / GN 62444-10	1
561117	CGA-MS-15-5-2-TPE	12	5	15.3	8.5	2	CGT-12 / GN 62444-12	5
561119	CGA-MS-15-6-2-TPE	12	6	15.3	8.5	2	CGT-12 / GN 62444-12	2
561121	CGA-MS-15-4-3-TPE	12	4	15.3	8.5	3	CGT-12 / GN 62444-12	1
561123	CGA-MS-15-5-3-TPE	12	5	15.3	8.5	3	CGT-12 / GN 62444-12	1
561125	CGA-MS-17-4-2-TPE	14	4	17.4	9	2	CGT-14 / GN 62444-14	5
561127	CGA-MS-17-6-2-TPE	14	6	17.4	9	2	CGT-14 / GN 62444-14	2
561129	CGA-MS-17-4-3-TPE	14	4	17.4	9	3	CGT-14 / GN 62444-14	2
561131	CGA-MS-17-6-3-TPE	14	6	17.4	9	3	CGT-14 / GN 62444-14	5
561133	CGA-MS-17-5-4-TPE	14	5	17.4	9	4	CGT-14 / GN 62444-14	5
561135	CGA-MS-17-6-4-TPE	14	6	17.4	9	4	CGT-14 / GN 62444-14	1
561137	CGA-MS-17-4-5-TPE	14	4	17.4	9	5	CGT-14 / GN 62444-14	2
561157	CGA-MS-20-6-2-TPE	17	6	19.8	9.3	2	CGT-17 / GN 62444-17	3
561159	CGA-MS-20-8-2-TPE	17	8	19.8	9.3	2	CGT-17 / GN 62444-17	2
561161	CGA-MS-20-6-3-TPE	17	6	19.8	9.3	3	CGT-17 / GN 62444-17	2
561139	CGA-MS-22-7-2-TPE	18	7	22.2	11	2	CGT-18 / GN 62444-18	5
561141	CGA-MS-22-8-2-TPE	18	8	22.2	11	2	CGT-18 / GN 62444-18	5
561143	CGA-MS-22-9-2-TPE	18	9	22.2	11	2	CGT-18 / GN 62444-18	3
561145	CGA-MS-22-7-3-TPE	18	7	22.2	11	3	CGT-18 / GN 62444-18	3
561147	CGA-MS-22-8-3-TPE	18	8	22.2	11	3	CGT-18 / GN 62444-18	3
561149	CGA-MS-22-5-4-TPE	18	5	22.2	11	4	CGT-18 / GN 62444-18	5
561151	CGA-MS-22-7-4-TPE	18	7	22.2	11	4	CGT-18 / GN 62444-18	5
561163	CGA-MS-25-7-4-TPE	21	7	25.1	13	4	CGT-21 / GN 62444-21	5
561165	CGA-MS-25-8-4-TPE	21	8	25.1	13	4	CGT-21 / GN 62444-21	3
561167	CGA-MS-25-6-6-TPE	21	6	25.1	13	6	CGT-21 / GN 62444-21	4
561153	CGA-MS-30-8,5-5-TPE	25	8.5	29.8	13	5	CGT-25 / GN 62444-25	6
561155	CGA-MS-30-5-8-TPE	25	5	29.8	13	8	CGT-25 / GN 62444-25	8

ELESA and GANTER models all rights reserved in accordance with the law.
Always mention the source when reproducing our drawings.

GN 62444.4

Reducers

for Cable Glands GN 62444, Brass, Metric Thread

SPECIFICATION

Brass MS
Nickel-plated

INFORMATION

Reducers GN 62444.4 enable a transition from a larger to a smaller internal thread, allowing the use of smaller cable glands than the housing was designed for.
In combination with a mounting nut, fastening in a through hole is also possible.

ACCESSORY

- GN 62444.1 Mounting Nuts (see page 11)



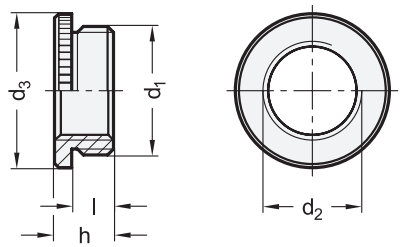

Application example

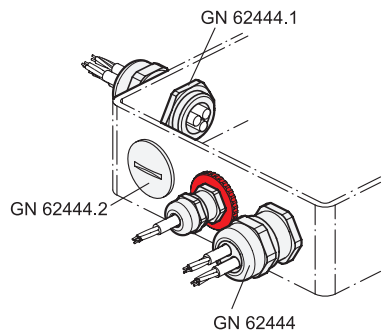

GN 62444.4

Description	Size	d_1	d_2	d_3	h	Length l	⚖
GN 62444.4-M16-M12-MS	M 16-M 12	M 16 x 1.5	M 12 x 1.5	20	8	6	8
GN 62444.4-M20-M16-MS	M 20-M 16	M 20 x 1.5	M 16 x 1.5	24	9	6.5	10
GN 62444.4-M25-M20-MS	M 25-M 20	M 25 x 1.5	M 20 x 1.5	30	10	7	18
GN 62444.4-M32-M25-MS	M 32-M 25	M 32 x 1.5	M 25 x 1.5	37	11.5	8	35
GN 62444.4-M40-M32-MS	M 40-M 32	M 40 x 1.5	M 32 x 1.5	43	11.5	8	46
GN 62444.4-M50-M40-MS	M 50-M 40	M 50 x 1.5	M 40 x 1.5	56	14	10	93
GN 62444.4-M63-M50-MS	M 63-M 50	M 63 x 1.5	M 50 x 1.5	66	14	10	124

ELESA and GANTER models all rights reserved in accordance with the law.
Always mention the source when reproducing our drawings.

Reducers

for CGT cable glands, metric and PG thread, technopolymer



MATERIAL
Glass-fibre reinforced polyamide based (PA) technopolymer, RAL 7035 (C3) grey colour.

STANDARD EXECUTIONS
- **CGT-HR**: metric threadings.
- **CGT-HR-PG**: PG threadings.

FEATURES AND APPLICATIONS
They are used to install a cable gland in a mounting hole on electrical equipment that does not match the thread size of the cable gland itself, ensuring mechanical protection and a secure seal. To secure the reducers, use the CGT-NTC mounting nut.

ACCESSORY
- CGT: cable glands (see page 7)
- CGT-NTC: mounting nuts (see page 12)

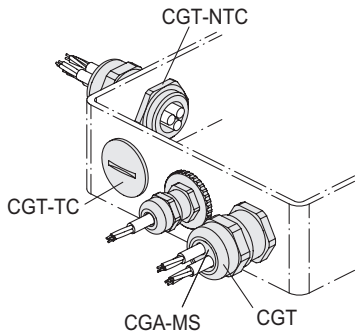

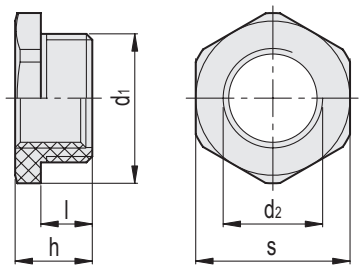

CGT-HR

Code	Description	d_1	d_2	h	l	s	⚖
560201-C3	CGT-HR-M16-M12-C3	M 16 x 1.5	M 12 x 1.5	12	8	24	3
560203-C3	CGT-HR-M20-M16-C3	M 20 x 1.5	M 16 x 1.5	12	8	24	4
560205-C3	CGT-HR-M25-M20-C3	M 25 x 1.5	M 20 x 1.5	14	8	32	7
560207-C3	CGT-HR-M32-M25-C3	M 32 x 1.5	M 25 x 1.5	16	10	36	9
560209-C3	CGT-HR-M40-M32-C3	M 40 x 1.5	M 32 x 1.5	19	12	46	16
560211-C3	CGT-HR-M50-M40-C3	M 50 x 1.5	M 40 x 1.5	21	14	55	24
560213-C3	CGT-HR-M63-M50-C3	M 63 x 1.5	M 50 x 1.5	22	15	65	34

ELESA and GANTER models all rights reserved in accordance with the law.
Always mention the source when reproducing our drawings.

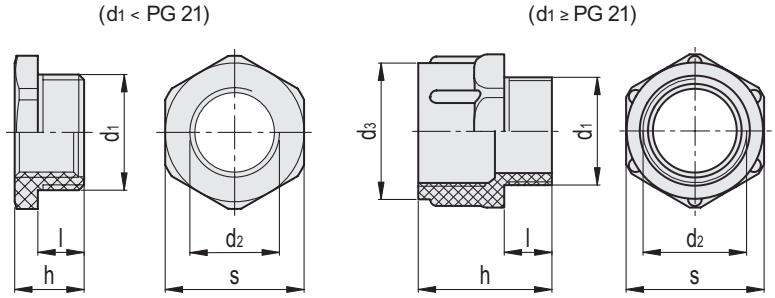

CGT-HR-PG

Code	Description	d_1	d_2	h	l	s	⚖
560215-C3	CGT-HR-PG9-PG7-C3	PG 9	PG 7	20.5	8	19	5
560217-C3	CGT-HR-PG11-PG9-C3	PG 11	PG 9	22.5	8	22	6
560219-C3	CGT-HR-PG13,5-PG11-C3	PG 13.5	PG 11	24	9	24	6
560221-C3	CGT-HR-PG16-PG13,5-C3	PG 16	PG 13.5	28	10	27	7
560223-C3	CGT-HR-PG21-PG16-C3	PG 21	PG 16	16	11	32	8
560225-C3	CGT-HR-PG29-PG21-C3	PG 29	PG 21	17	11	40	14
560227-C3	CGT-HR-PG36-PG29-C3	PG 36	PG 29	24	18	50	14
560229-C3	CGT-HR-PG42-PG36-C3	PG 42	PG 36	24	18	55	19
560231-C3	CGT-HR-PG48-PG42-C3	PG 48	PG 42	23	17	60	19

ELESA and GANTER models all rights reserved in accordance with the law.
Always mention the source when reproducing our drawings.

COPYRIGHT © 2026
Elesa S.p.A and OTTO GANTER GmbH & Co. KG
All rights reserved.
No part of this catalogue can be reproduced in whole
or in part without prior written permission from
Elesa S.p.A or OTTO GANTER GmbH & Co. KG

ELESA and GANTER models all rights reserved in accordance with the law.
Always mention the source when reproducing our drawings.

elesa+Ganter



Find out more on **elesa-ganter.com**

ELESA S.p.A.
Via Pompei 29
20900 Monza (MB)
Italy
+39 039 28 111
info@elesa.com
elesa.com

OTTO GANTER GmbH & Co.KG
Triberger Straße 3
78120 Furtwangen
Germany
+49 7723 65 07 0
info@ganternorm.com
ganternorm.com

DESIGNED
FOR ENGINEERING

ZDEPEGCABLEENG26 | SP-EG-EN1126-CABLE